Indian Institute Of Information Technology Vadodara

Embedded System Project

Group – 9:

Team Members :

1. Ch Rambhadra kumar -202311024
2. Ch punyamurthy - 202311023
3. Annepu Adarsh - 202311012
4. Dheeraj M.G - 202311027

Problem Statement

Agriculture plays an important role in human life.

Nutrient stress reduces plant growth and crop yield.

Traditional detection methods:

- Time consuming
- Expensive
- Require laboratory testing

Need for:

- Low-cost
- Real-time
- Automated monitoring system

Research Understanding

From this ACM paper we studied that:

Nutrient absorption depends on:

- Soil moisture
- Soil pH
- Temperature
- Humidity
- Light intensity

Improper environmental conditions lead to:

- Nutrient deficiency
- Nutrient excess
- Poor crop productivity

Instead of directly measuring nutrients in lab, we use indirect environmental indicators.

Proposed System Architecture

Block Diagram: Sensors → Arduino Uno → Processing Logic → LCD Display + LED Alert

Sensors used:

- Soil Moisture Sensor
- pH Sensor
- DHT11 (Temperature + Humidity)
- LDR (Light)

Arduino compares values with threshold limits.

The **Tinkercad** what we have done

System Architecture - Circuit Design

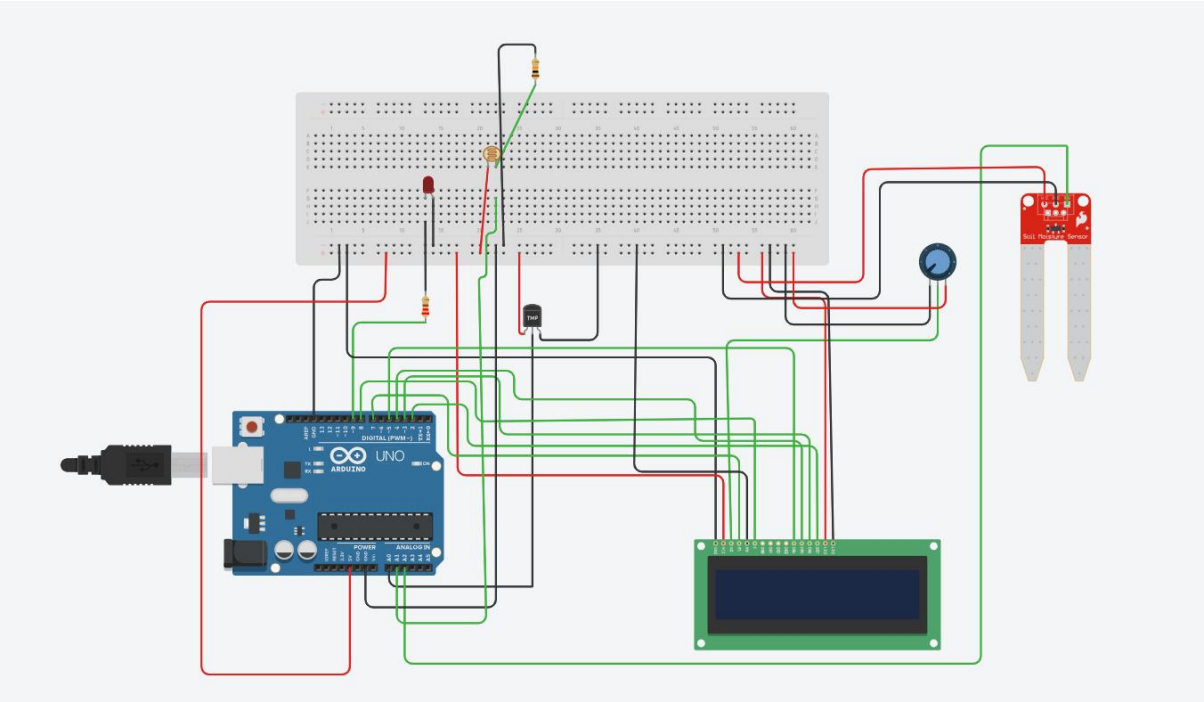

Hardware Components

- Arduino Uno
- Soil Moisture Sensor
- pH Sensor
- DHT11 Sensor
- LDR
- 16x2 LCD
- LED
- Breadboard
- Resistors
- Jumper wires

1) Arduino Uno

2)Soil Moisture sensor

3)Ph sensor

4)dht11 sensor

5) Light dependent resistor

6) 16*2 LCD display

7) LED indicator

8) Resistors

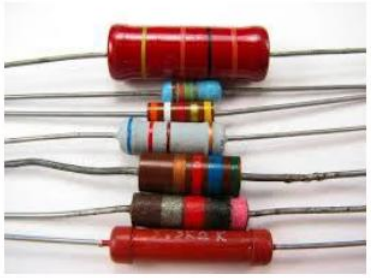

9) Breadboard

10) Jumper wires

Working Principle

1. Sensors collect real-time environmental data.
2. Arduino reads analog/digital values.
3. Threshold comparison is performed.
4. If values exceed limits → Stress detected.
5. LCD shows status.
6. LED indicates alert.

Implemented Module

Stress Detection Logic:

if (moistureValue < 300) stress = true; if (pHValue < 300 || pHValue > 700) stress = true; if (temperature > 35) stress = true;

Soil moisture below threshold → stress pH imbalance → stress High temperature → stress

Arduino Code Implementation

Key functions:

- analogRead() reads sensors
- dht.readTemperature() reads temperature
- LCD displays status
- LED turns ON during stress

Components:

- LCD initialization
- Sensor reading
- Stress logic
- LED control

Tinkercad Simulation

Simulation features:

- Circuit diagram testing
- Working LCD output
- LED ON/OFF condition

Testing:

- Simulation used for safe testing
- Tested multiple stress scenarios
- Verified output for healthy and stress conditions

Tinkercad Simulation - Testing Environment
the link what we did is ---->

https://www.tinkercad.com/things/hh3TWa05zF6/editel?returnTo=%2Fdashboard&sharecode=kkKCCWqt5hneKMB-7WXmuZsrHTQTIqknCuOOGbQJF-Q

Current Status

- ✧ Software logic implemented
- ✧ Stress detection tested
- ✧ Hardware simulation in progress
- ✧ Machine Learning planned

Conclusion

- Designed low-cost embedded system
- Real-time stress detection
- Tested using Tinkercad
- One complete module implemented (Stress Detection Module)
- Future scope includes ML + IoT